DRILL SPEED CONTROLLER
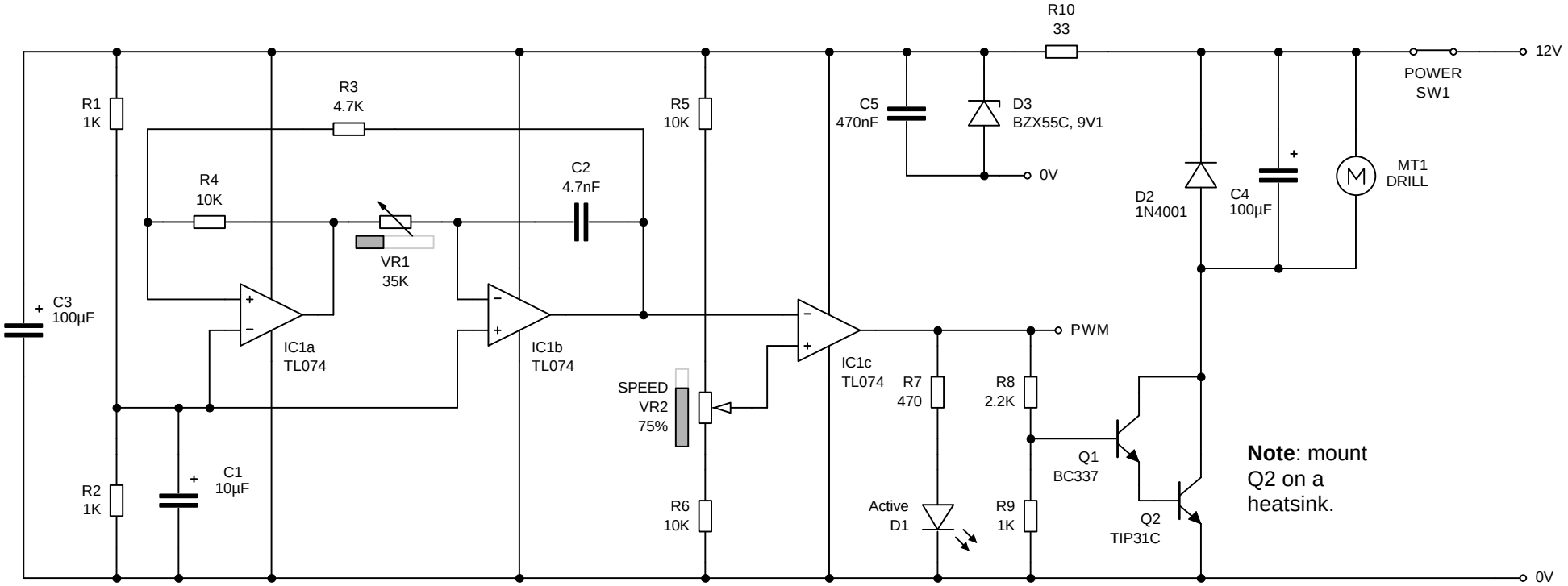
This circuit uses PWM to control the power delivered to a load, in this case a 12 PCB drill. It is based upon a triangle wave generator and comparator controlling the width and thus duty cycle of the output from 0-100%. The frequency is set using VR1 and is about 50Hz when in the midway position. Note Q1 and Q2 can be replaced by a high current Darlington such as TIP122 or TIP126